REMOVE SHARP EDGES. DO NOT SCALE – IF IN DOUBT, ASK.

COPYRIGHT
This drawing is protected by copyright must not be reproduced in any form, including manufacture of the product shown therein, without the prior written consent of the copyright owners.
©2004 MIDLAND VALVES

GENERAL MACHINING TOLERANCES
± 0.3mm UP TO 250mm
± 0.5mm OVER 250mm TO 500mm
± 1.2mm OVER 500mm
(OR THEIR IMPERIAL EQUIVALENTS)

SURFACE FINISHES: –
ROUGH MACHINE 6.3 µm
FINISH MACHINE 3.2 µm

THIRD ANGLE PROJECTION

DRAWING NUMBER	ISSUE
03.6565	0

COMPONENT TABLE		
ITEM	COMPONENT	SPECIFICATION
1	FRAME	BS 1452, 220
2	DOOR	BS 1452, 220
3	SEALING FACES	BS 2874 PB102
4	HINGE LINKS	BS 2789 420/12
5	HINGE PINS	BS 970 316
6	WASHERS	GRADE A4
7	COTTER PINS	GRADE A4

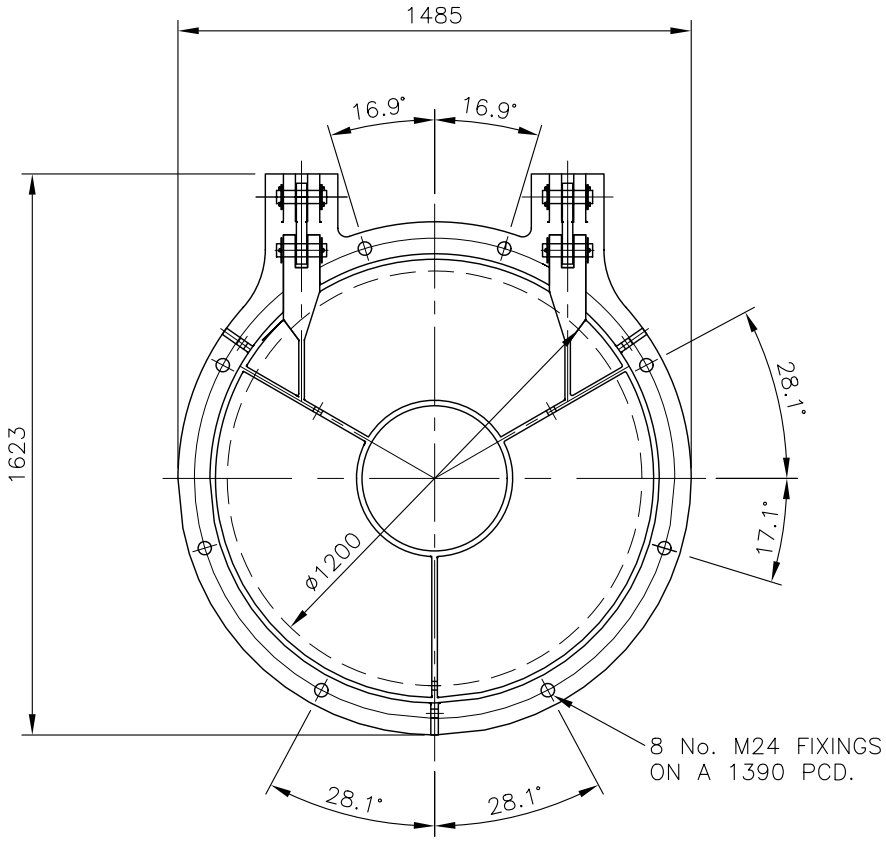

FRONT ELEVATION

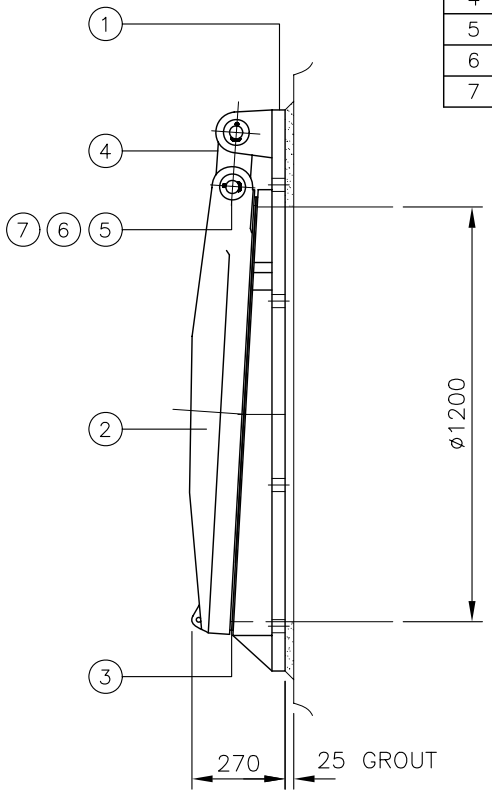

SIDE ELEVATION

ISSUE	NAME	DATE	CHECKED	REVISION

DRAWN BY	DATE	CHECKED BY	DATE
JMW	25/03/04	ML	25/03/04

SCALE	DRAWING NUMBER	ISSUE
1:15	03.6565	0

JOB No. PART No.

MATERIAL SPECIFICATION:
AS LISTED ON DRAWING

CONSULTING ENGINEERS:
CUSTOMER:
SCHEME:

TITLE:
ARRANGEMENT OF 1200MM DIA. DOUBLE HUNG FLAP VALVE.

MIDLAND VALVES
SUPPLIERS OF PENSTOCKS TO THE WATER INDUSTRY

MIDLAND VALVES
UNIT 42 CROSSGATE ROAD
PARK FARM IND EST
REDDITCH, WORCESTERSHIRE
B98 7SN
TELE: 01527 517542
FAX: 01527 518087
e-mail: mike@midlandvalves.fsnet.co.uk

FILE REF: MV A3-15
SCALE 1:15
ORIGINAL SHEET SIZE A3

ALL DIMENSIONS IN mm UNLESS OTHERWISE STATED